LOGAN

» INSTRUCTIONS OF USE

STYLE® ERGONOMICS AUSTRALIA
NSW | VIC | QLD | HONG KONG | CHINA

WARRANTY 10 Year | WEIGHT LIMIT 140 Kilogram | IMPORTED

✗ Do not use as a step ladder

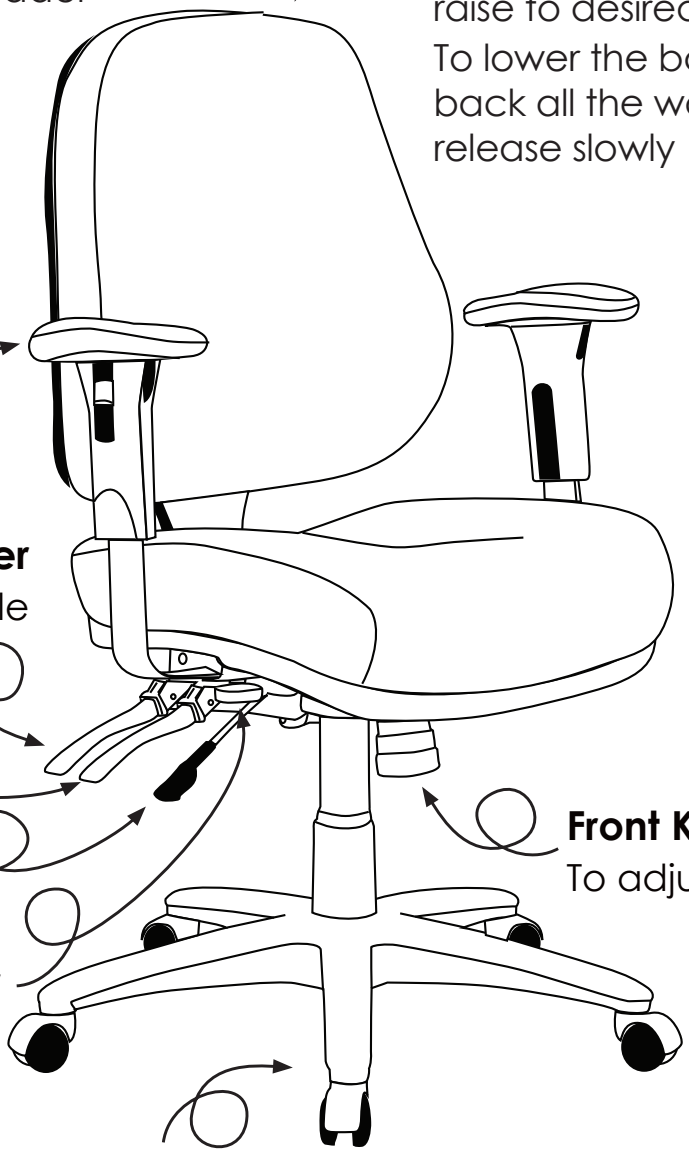

- » Vacuum regular
- » Regularly adjust mechanism angle
- » Regularly adjust gas height
- » All warranty claims to be forwarded to place of purchase
- » Warranty covers components and workmanship only
- » Damage or wear and tear not covered by warranty
- » Misuse or abuse will not be covered under warranty